MANUEL de VOL

FLIGHT MANUAL

R3000/160

Robin
AVIATION

Annexe 1

Liberté • Égalité • Fraternité
RÉPUBLIQUE FRANÇAISE

Cet intercalaire doit obligatoirement être inséré devant la page de garde d'un manuel de vol en langue anglaise

AVERTISSEMENT

Le présent document en langue anglaise est le manuel de vol approuvé par l'Agence européenne de la sécurité aérienne.

En application des dispositions de l'arrêté du 24 juillet 1991 relatif aux conditions d'utilisation des aéronefs civils en aviation générale (« Un vol ne peut être entrepris que si, d'une part les membres d'équipage sont familiarisés avec l'aéronef et son équipement de bord, notamment le matériel de sécurité-sauvetage et les systèmes spéciaux, et d'autre part ont une connaissance pratique de son manuel de vol ou des documents acceptés comme équivalents. »),

Nul ne peut utiliser l'aéronef avec ce seul document s'il n'a pas une connaissance suffisante de la langue anglaise.

A défaut, il appartient au propriétaire ou à l'exploitant de l'aéronef de se procurer une traduction de ce document sous sa responsabilité.

Référence : Instruction du 13/11/2009 relative à la langue des manuels de vol

FLIGHT MANUAL R 3000/160

Manufacturer : **AVIONS PIERRE ROBIN**

1, route de Troyes
21121 - DAROIS
Tel. 80.35.61.01
Tlx. 350 818 F
Fax. 80.35.60.80

Type Certificate nr 172 dated 17.11.1988

Serial number 167

Registration G-CCCN

VISA D G A C

11 MAI 1990

DIRECTION GÉNÉRALE DE L'AVIATION CIVILE
SERVICE DE LA FORMATION AÉRONAUTIQUE ET DU CONTRÔLE TECHNIQUE
RÉPUBLIQUE FRANÇAISE

L'Ingénieur d'Études
et de Fabrications

F. CARRETTE

Sections approved :
2,3,4, and section 5
pages 5.02, 5.03
5.04, 5.05, 5.07.

This aircraft must be operated within the operating limits specified in the present flight manual.

THIS DOCUMENT MUST BE PERMANENTLY KEPT ON BOARD THE AIRCRAFT.

Edition 2 - April 1990 Audt: 1-10/92

SECTION O GENERAL

TABLE OF CONTENTS

List of revisions 0.02
List of abbreviations used 0.04
List of radio abbreviations 0.05
Conversion factors 0.06
Barometric Pressure Conversion table 0.07

LIST OF REVISIONS

REVISION	DESCRIPTION	Modified pages		DGAC APPROVAL
		N °	DATE	
1	Corrections	0.02 2.05 2.07 3.02 3.08 4.08 4.12 5.04	Oct.92 Oct.92 Oct.92 Oct.92 Oct.92 Oct.92 Oct.92 Oct.92	DIRECTION GÉNÉRALE DE L'AVIATION CIVILE Ingénieur d'Etude et de Fabrication BE CARRE 19 FEV. 1993

LIST OF REVISIONS

Revision	Description	Modified Pages		CAA Approval
		No	Date	
CS 2 ISS1	Section 7.02 NIGHT VMC		15.4.03	
SUPP 1 ISS 3	LIMITATIONS		15.4.03	
CS FOR NOTICE 88	Supplement for CAA AIRWORTHINESS NOTICE 88		15.4.03.	

LIST OF ABBREVIATIONS USED

A	Ampere
° C	Degrees Centigrade
° F	Degrees Fahrenheit
ft	Feet
in	Inches
HP	Horse power
hPa	Hectopascal
in.Hg	Inches of Mercury
lb	Pounds
kg	Kilogramme
kt	Knot
l	Litre
imp gal	Imperial gallon
us gal	US gallon
Nm	Nautical mile
km	Kilometer
m	Meter
cm	Centimeter
mm	Milimeter
m/s	Meter per second
mbar	Millibar
rpm	Revolutions per minute
TAS	True air speed
PA	Pressure Altitude
V	Volt
VA	Manoeuvering speed
VC	Calibrated air speed
Vc	Calculated cruise speed
Vfe	Maximum Flap Extended Speed
VI	Indicated Air Speed
Vne	Never Exceed Speed
Vno	Maximum Cruising Speed
Vso	Stalling speed landing configuration
Vs1	Stalling speed flaps up configuration

LIST OF RADIO ABBREVIATIONS

ADF	Automatic Direction Finder
ATC.....	Air Traffic Control (Transponder=XPDR)
COM.....	Communication Transceiver
DME.....	Distance Measuring Equipment
ELT.....	Emergency Locator Transmitter
IFR.....	Instrument Flight Rules
ILS.....	Instrument Landing System
MKR.....	Marker Beacon Receiver
NAV.....	Navigation Indicator and Receiver
AUDIO.....	Audio Control Panel
VFR.....	Visual Flight Rules
VHF.....	Very high Frequency
VOR.....	Visual Omni-Range (beacon)

CONVERSION FACTORS

nautical miles	X	1.852	=	...kilometers
feet	X	0.305	=	...meters
inches	X	0.0254	=	...meters
inches	X	25.4	=	...millimeters
feet/minute	X	0.00508	=	...meter/second
gallons (US)	X	3.785	=	...liters
gallons (Imp)	X	4.546	=	...liters
knots	X	1.852	=	...km/h
psi	X	0.0689	=	...bar
in.Hg	X	33.86	=	...mbar
lb	X	0.453	=	...kg
(°F - 32)	X	5/9	=	...°C

Kilometers	X	0.539	=	...nautical miles
meters	X	3.281	=	...feet
meters	X	39.37	=	...inches
millimeters	X	0.03937	=	...inches
meter/second	X	197	=	...feet/minute
liters	X	0.264	=	...gallons (US)
liters	X	0.220	=	...gallons (Imp)
km/h	X	0.539	=	...knots
bar	X	14.51	=	...psi
mbar	X	0.02953	=	...in.Hg
kg	X	2.205	=	...lb
°C	X	9/5 + 32	=	...°F

BAROMETRIC PRESSURE CONVERSION TABLE

Below pressure in MILLIBAR or HECTOPASCAL, the pressure in INCHES of MERCURY is indicated.

	→ mbar or hPa → in.Hg								
950 28.05	960 28.35	970 28.64	980 28.94	990 29.23	1000 29.53	1010 29.63	1020 30.12	1030 30.42	1040 30.71
951 28.08	961 28.38	971 28.67	981 28.97	991 29.26	1001 29.56	1011 29.85	1021 30.15	1031 30.45	1041 30.74
952 28.11	962 28.41	972 28.70	982 29.00	992 29.29	1002 29.59	1012 29.88	1022 30.18	1032 30.47	1042 30.77
953 28.14	963 28.44	973 28.73	983 29.03	993 29.32	1003 29.62	1013 29.91	1023 30.21	1033 30.50	1043 30.80
954 28.17	964 28.47	974 28.76	984 29.06	994 29.35	1004 29.65	1014 29.94	1024 30.24	1034 30.53	1044 30.83
955 28.20	965 28.50	975 28.79	985 29.09	995 29.38	1005 29.68	1015 29.97	1025 30.27	1035 30.56	1045 30.86
956 28.23	966 28.53	976 28.82	986 29.12	996 29.41	1006 29.71	1016 30.00	1026 30.30	1036 30.59	1046 30.89
957 28.26	967 28.56	977 28.85	987 29.15	997 29.44	1007 29.74	1017 30.03	1027 30.33	1037 30.62	1047 30.92
958 28.29	968 28.58	978 28.88	988 29.18	998 29.47	1008 29.77	1018 30.06	1028 30.36	1038 30.65	1048 30.95
959 28.32	969 28.61	979 28.91	989 29.20	999 29.50	1009 29.80	1019 30.09	1029 30.39	1039 30.68	1049 30.98

REMINDER :
The Standard Pressure of 1013.2 mbar or hPa equals 29.92 in.Hg

PAGE INTENTIONALLY LEFT BLANK

SECTION 1 DESCRIPTION

TABLE OF CONTENTS

Aircraft dimensions 1.03
Wings 1.03
Ailerons 1.03
Wing flaps 1.04
Horizontal stabilizer 1.04
Vertical stabilizer 1.04
Landing gear 1.04
Engine 1.05
Propeller 1.06
Fuel system 1.07
Fuel 1.08
Oil 1.08
Instrument panel 1.10
Heating and ventilation 1.12
Electrical system 1.13

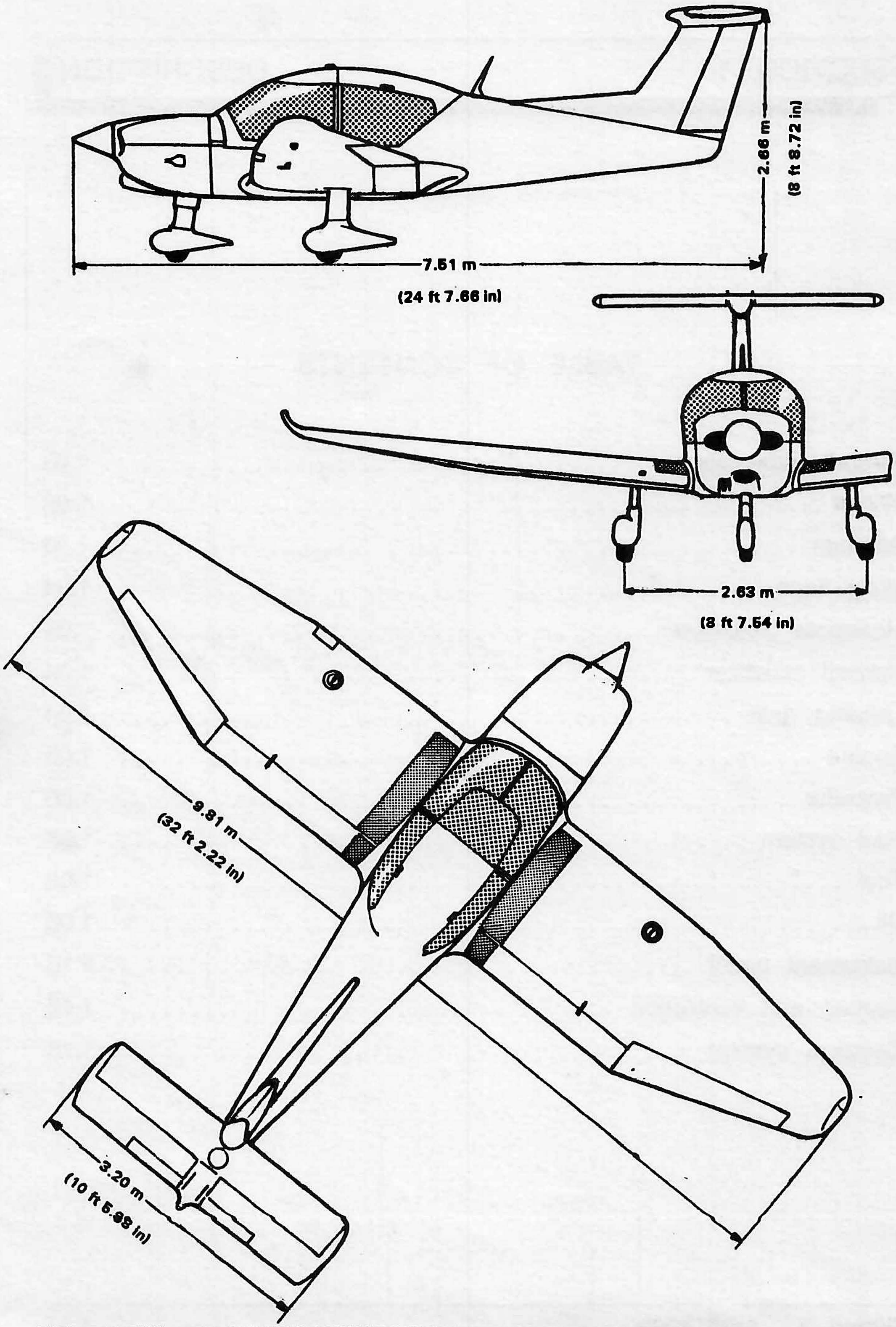
2.66 m
(8 ft 8.72 in)
7.51 m
(24 ft 7.66 in)
2.63 m
(8 ft 7.54 in)
9.81 m
(32 ft 2.22 in)
3.20 m
(10 ft 5.88 in)

OVERALL DIMENSIONS

Wing span .....(32 ft 2.22 in) 9.81 m
Overall length .....(24 ft 7.66 in) 7.51 m
Overall height .....(8 ft 8.72 in) 2.66 m

INTERNAL CABIN DIMENSIONS

Length .....(7 ft 9.3 In) 2.37 m
Width .....(3 ft 9.66 In) 1.16 m
Height .....(3 ft 10.45 In) 1.18 m
4 seats, accessible from both sides by sliding canopy.
Volume of baggage space ..... (15.2 cu ft) 0.43 m^3

WINGS

Wing area ..... (155.75 sq ft) 14.47 m^2
Airfoil .....NACA 43013.5 modified
Aspect ratio 6.65
Dihedral at wing tips ..... 6°

AILERONS (each)

Surface ..... (6.35 sq ft) 0.59 m^2
Span .....(6 ft 3.19 in) 1.91 m

WINGS FLAPS (each)

Surface ..... (21.09 sq ft) 1.96 m^2
Span ..... (6 ft 11.46 in) 2.12 m

HORIZONTAL STABILIZER

Total control surface ..... (26.15 sq ft) 2.43 m^2
of which antibalance tab ..... (12.48 sq ft) 1.12 m^2
Span ..... (10 ft 6 in) 3.20 m

VERTICAL STABILIZER

Surface overall ..... (11.84 sq ft) 1.10 m^2
Stabilizer ..... (7.53 sq ft) 0.70 m^2
Rudder ..... (4.3 sq ft) 0.40 m^2

LANDING GEAR

Fixed Tricycle Type

Track ..... (8 ft 7.54 in) 2.63 m

Oil, shock struts : MIL. H. 5606 - A
Norme AIR 3520

Nose Gear

Tyre pressure ..... (29.02 psi) 2 bar
Shock strut pressure ..... (87.06 psi) 6 bar
Tyre size ..... 355 x 135

Main landing gear

Tyre pressure ..... (33.37 psi) 2.3 bar
Shock strut pressure ..... (130.59 psi) 9 bar
Tyre size ..... 380 x 150

BRAKES

The disc brakes are operated by an indepedant hydraulic circuit on each main gear wheel.

Hydraulic oil ..... MIL. H. 5606 - A
Norme AIR 35 20

POWER PLANT

Engine

Manufacturer ..... LYCOMING
Type O-360-A3A
Number of cylinders 4
Power (2600 rpm) ..... (160 HP) 119 KW
Maximum continuous power ..... 2600 rpm

PROPELLERS

MANUFACTURER	SENSENICH
TYPE	76 EM8 S5-0-64
DIAMETER	*1.93 m (76 in)
PITCH	64 in
MINIMAL STATIC RPM FULL THROTTLE SEA LEVEL	2200

* Any reduction in diameter during repair is forbidden.

FUEL SYSTEM DIAGRAM

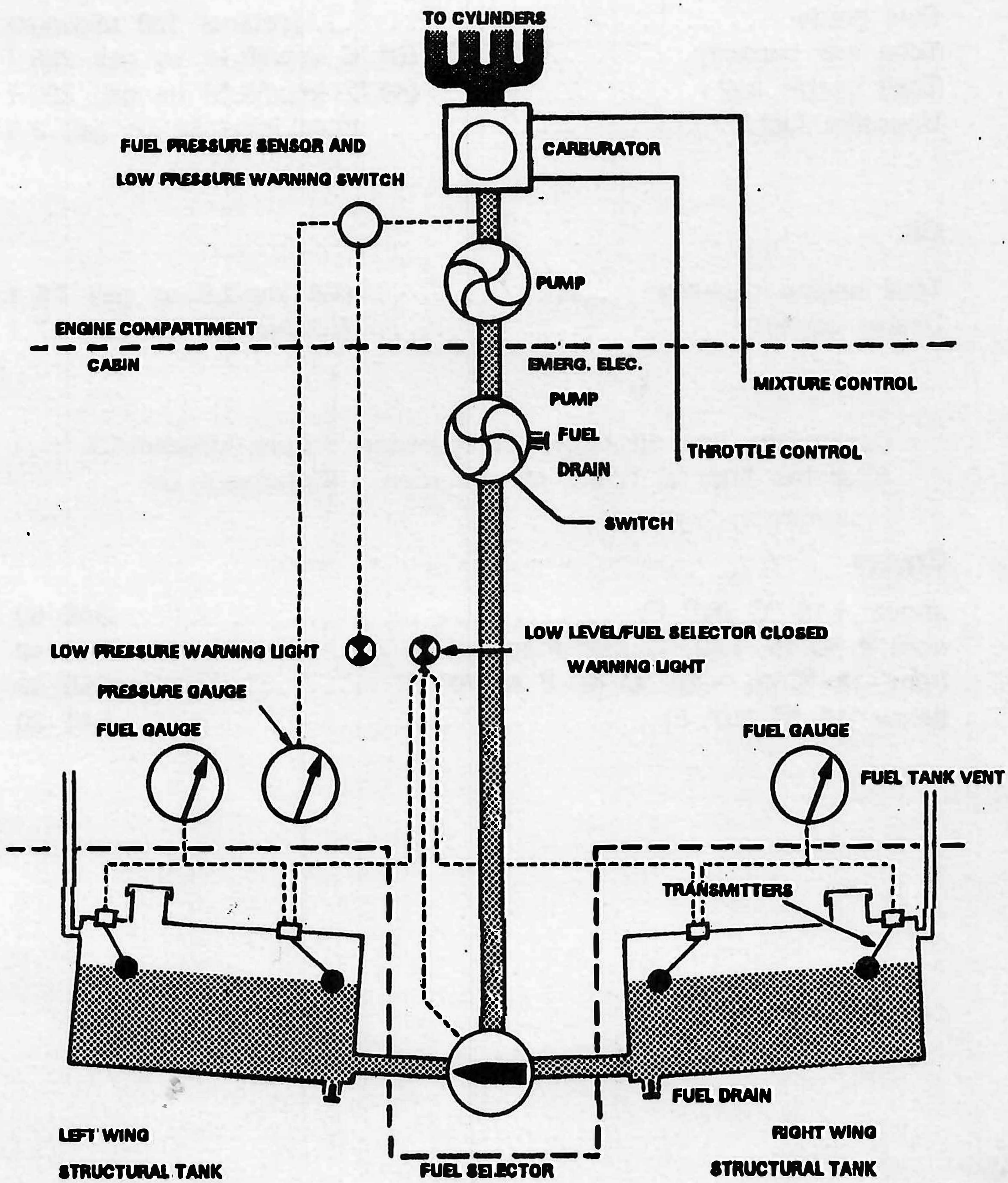

FUEL

Aviation petroleum ..... AVGAS 100 LL
Fuel grade ..... (octane) 100 minimum
Total fuel capacity ..... (50.16 imp/60.19 us gal) 228 l
Total usable fuel ..... (49.72 imp/59.66 us gal) 226 l
Unusable fuel ..... (0.44 imp/0.52 us gal) 2 l

OIL

Total engine capacity ..... (1.6 imp/2.0 us gal) 7.5 l
Usable capacity ..... (1.25imp/1.5 us gal) 5.7 l

During the first 50 hours of operation : Pure Mineral Oil.
After the first 50 hours of operation : Dispersant Oil.

Grades

above +15 °C (60° F) ..... SAE 50
from 0 °C to +30 °C (30° F to 90° F) ..... SAE 40
from -15 °C to +20 °C (0° F to 70° F) ..... SAE 30
below -10 °C (10° F) ..... SAE 20

PAGE INTENTIONALLY LEFT BLANK

INSTRUMENT PANEL

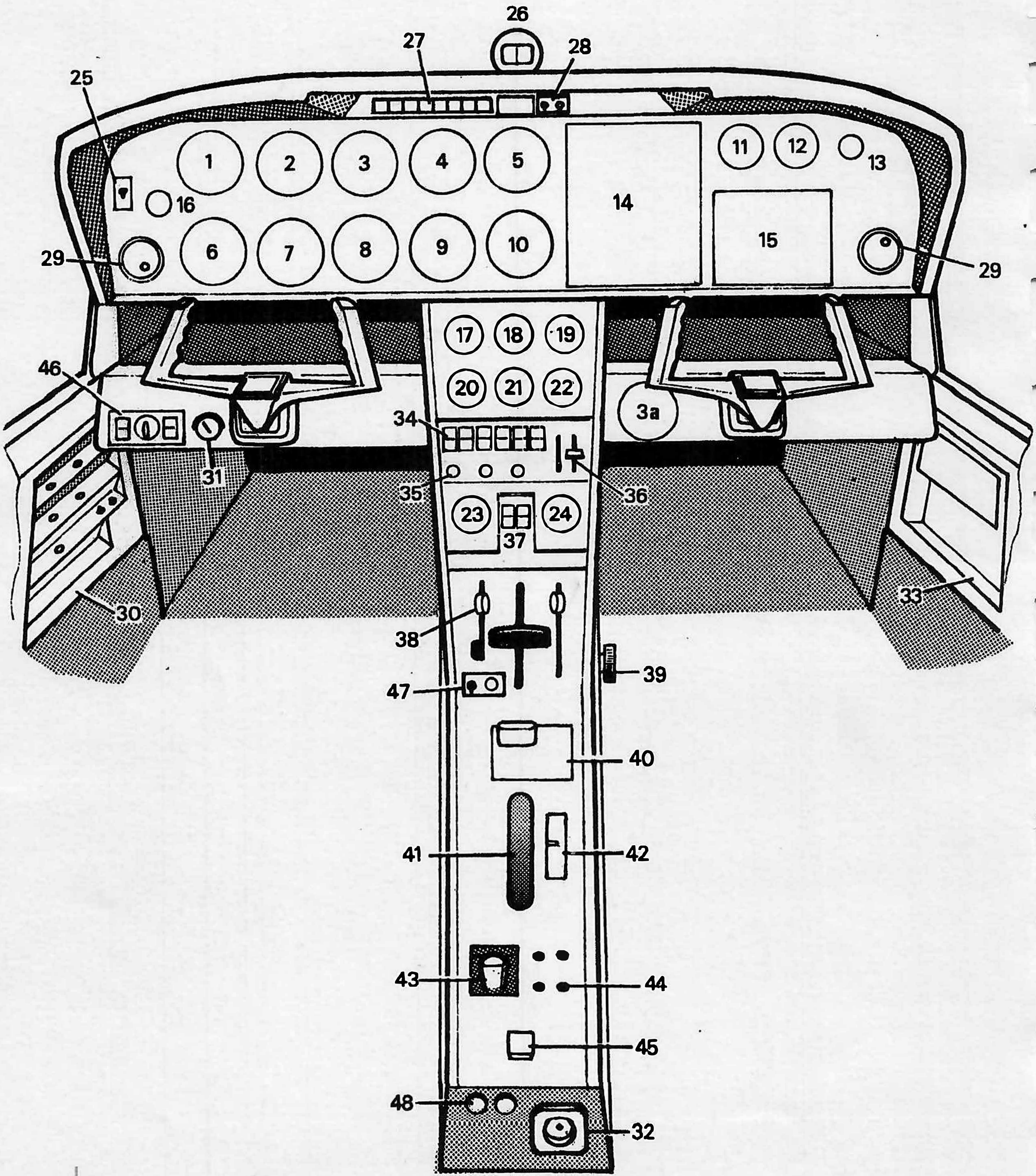

1 ..... Airspeed indicator
2 ..... Gyro horizon indicator
3,3A ... Altimeter , Altimeter 2 (optional)
4,5,9 ... Radio or optional equipment
6 ..... Turn coordinator, or turn and bank indicator
7 ..... Directional gyro
8 ..... Rate of climb indicator
10 ..... Tachometer
11,12,13 Radio/NAV or optional equipment
14,15 .. Radio equipment (optional)
16 ..... Vacuum gauge
17 ..... Voltmeter
18 ..... Oil pressure gauge
19 ..... Oil temperature gauge
20 ..... Left tank, fuel quantity gauge
21 ..... Fuel pressure gauge
22 ..... Right tank, fuel quantity gauge
23,24 .. Optional instruments (carbu. temp., EGT)
25 ..... Emergency beacon control (optional)
26 ..... Magnetic compass
27 ..... Annunciator panel
28 ..... Day/night lighting selector.
Annunciator lights test push button.
29 ..... Cabin ventilators
30 ..... Circuit breakers panel
31 ..... Magneto selector/starter
32 ..... Air distribution control
33 ..... Fuses panel
34 ..... Switch-type circuit breakers
35 ..... Lighting dimmer control
36 ..... Flap control lever
37 ..... Switch-type circuit breaker (light optional)
38 ..... Engine control
39 ..... Levers friction lock
40 ..... Shut off valve/fuel tank selector
41 ..... Elevator trim tab control wheel
42 ..... Elevator trim tab position indicator
43 ..... Microphone (optional)
44 ..... Phones jacks
45 ..... Parking brake
46 ..... Roll stabilizer (optional)
47 ..... Electric directional trim control (optional)
48 ..... Hot air cold air pull knobs

HEATING AND VENTILATION

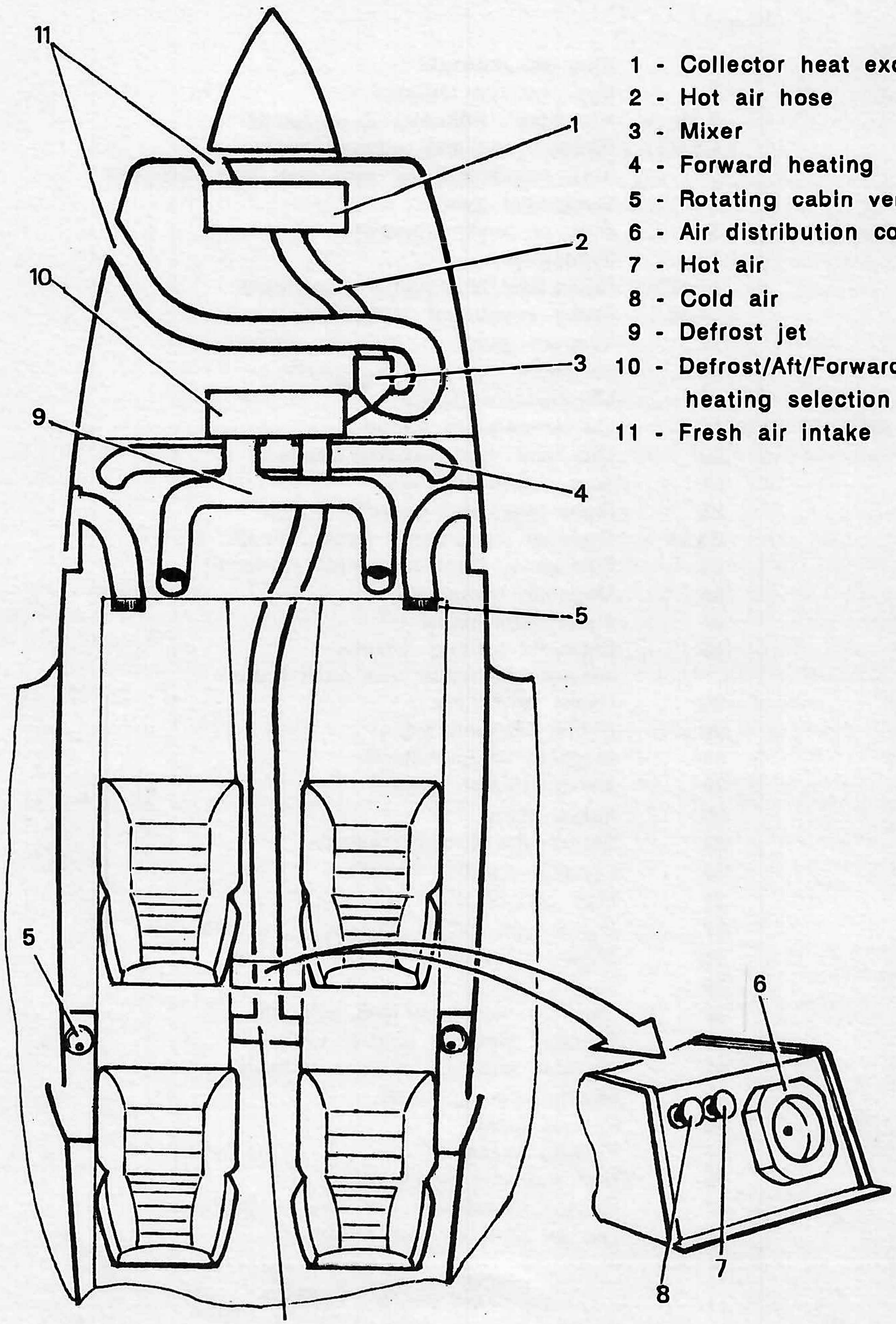

1 - Collector heat exchanger
2 - Hot air hose
3 - Mixer
4 - Forward heating
5 - Rotating cabin ventilators
6 - Air distribution control
7 - Hot air
8 - Cold air
9 - Defrost jet
10 - Defrost/Aft/Forward heating selection box
11 - Fresh air intake

ELECTRICAL SYSTEM

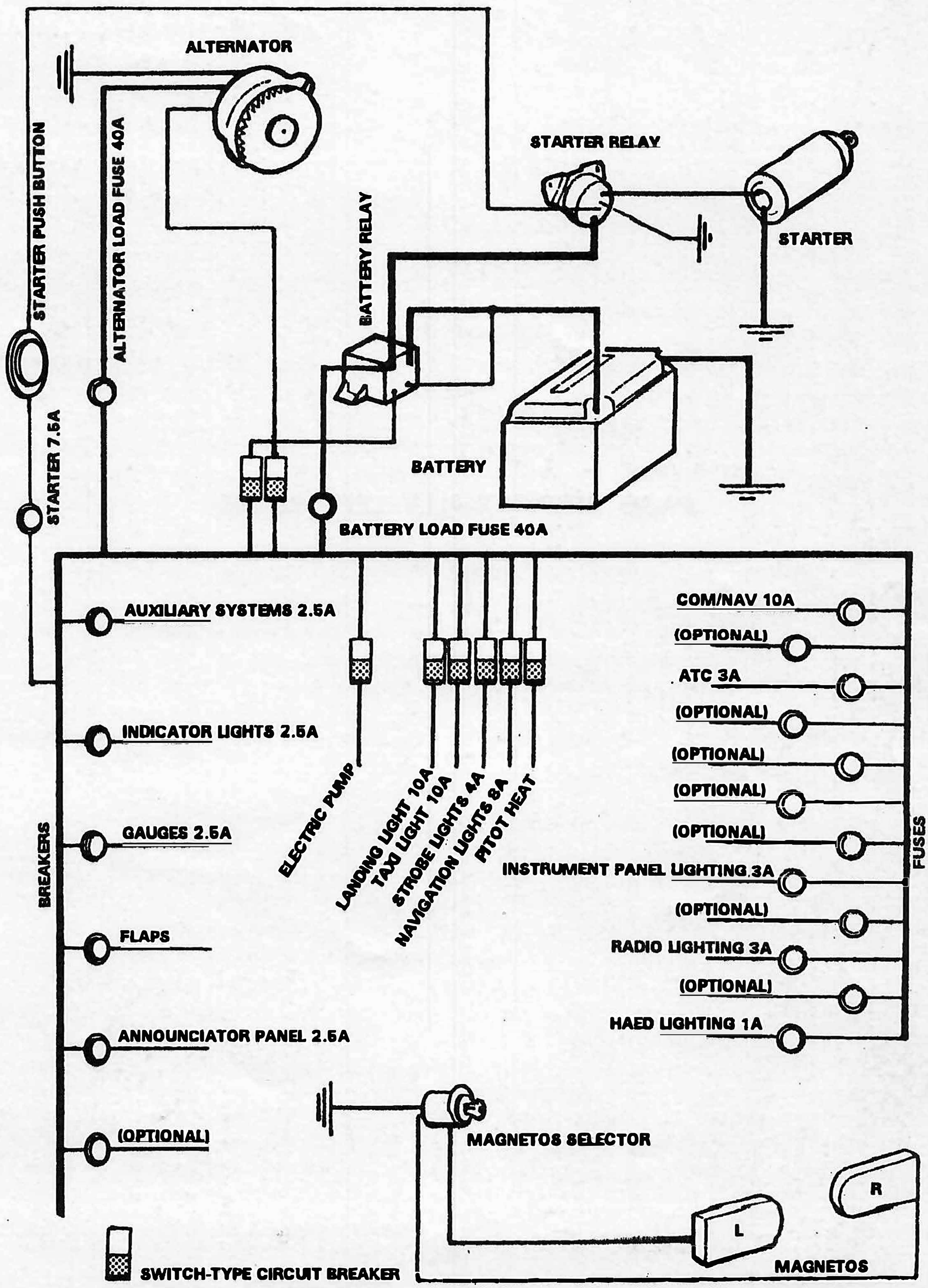

PAGE INTENTIONALLY LEFT BLANK

SECTION 2 LIMITATIONS

TABLE OF CONTENTS

Certification standards 2.03
Approved operation 2.03
Airspeed limitations 2.03
Airspeed indicator markings 2.03
Flight load factor limits at gross weight 2.04
Balance 2.04
Loading limits 2.04
Load planning 2.05
Engine limitations 2.06
Operation placards 2.07
Operational limitations 2.09

CIVIL AVIATION AUTHORITY

CAA SUPPLEMENT NO 1 ISSUE 3 to the Avions Pierre Robin R3000/160 Flight Manual Edition 2 Dated April 1990

(CAA Ref:2152/39488)

Serial No: 167 **Registration Mark:** G-CCCN

ADDITIONAL LIMITATIONS AND INFORMATION FOR UNITED KINGDOM CERTIFICATION

The limitations and information contained herein either supplement or, in the case of conflict, override those in the flight manual.

When the aeroplane is flown for the purposes of public transport, the performance information contained in the Flight Manual, and in any relevant supplement or change sheet, shall be used in assessing the ability of the aeroplane to comply with the requirements of the Air Navigation (General) Regulations. It is recommended that this same information is used by the commander before every flight, regardless of purpose, to satisfy himself/herself that the aeroplane can take-off, carry out the flight, and land safely in the conditions expected, so as to comply with the preflight action of the commander of an aircraft required by the Air Navigation Order.

LIMITATIONS

1. This type of aeroplane is eligible for certification in the Transport Category (Passenger). However, this particular aeroplane may be restricted to another category and to some particular use. This will be stated in the Certificate of Airworthiness.

To be inserted in Flight Manual facing page 2.03. and the CAA revisions record sheet amended accordingly.

CIVIL AVIATION AUTHORITY

CAA Approved
19 February 1998

LIMITATIONS (continued)

2. When operating for the purpose of public transport, the aeroplane is classified in Performance Group E.

3. The minimum crew is one pilot.

4. Subject to the Weight and Balance information in Section 2 - Limitations and Section 6 - Weight and Balance, the total number of persons carried including crew shall not exceed 4 nor the number of seats fitted which are approved for take-off and landing. Children under the age of two and sharing a seat with an adult need not be included in this total.

5. Flight into known or forecast icing conditions is prohibited.

6. The aeroplane is approved for Day and Night VMC operation subject to the aircraft being equipped in accordance with the Air Navigation Order.

7. The aeroplane must comply with the requirements of Airworthiness Notices 33 - Unprotected Starter Circuits and 88 - Low Voltage.

8. No aerobatic manoeuvres other than those listed on page 2.09 of the Flight Manual shall be performed.

PERFORMANCE

9. Aircraft of this type are required to be issued with a noise certificate. Compliance with the noise certification requirements of BCAR Section N Issue 5 (equivalent to ICAO Annex 16 Chapter 6) is accepted on the basis of the approval issued by DGAC.

10. To allow for the performance recorded on this type of aeroplane during flight tests the following adjustments must be made to the performance scheduled in the Flight Manual.

    Increase the take-off distances by 10%

    Decrease the scheduled rate of climb by 120 ft/min.

- END -

NOTE

All speeds in this manual are Indicated Air speeds unless orherwise specified

CERTIFICATION STANDARDS

The R 3000/160 aircraft has been certified on the 17.11.88 in the "NORMAL" and "UTILITY" category conforming to FAR 23 Amendments 1 to 23.

APPROVED OPERATION

VFR by day, in non-icing conditions

AIRSPEED LIMITATIONS	km/h (kt)
Vne never exceed	314 (170)
Vno max. cruise	249 (134)
Va max. maneuver	213 (115)
Vfe max. flaps extended	174 (94)

AIRSPEED INDICATOR MARKINGS		km/h	kt
Red line-never exceed	Vne	314	170
Yellow arc operate with caution and only in "smooth air"	Vno - Vne	249 - 314	134 - 170
Green arc normal operation range	Vs1 - Vno	106 - 249	57 - 134
White arc	Vso - Vfe	91 - 174	49 - 94

LOAD FACTOR LIMITS AT GROSS WEIGHT

(2205 lb) 1000 kg (category "U")
Flaps up ..... n between + 4.4 and -2.2
Flaps down ..... n = +2

(2536 lbs) 1150 kg (category "N")
Flaps up ..... n between + 3.8 and -1.9
Flaps down ..... n = +2

MAXIMUM AUTHORIZED WEIGHTS

	Cat."U"	Cat."N"
On take off	(2205 lb) 1000 kg	(2536 lb) 1150 kg
On landing	(2205 lb) 1000 kg	(2536 lb) 1150 kg

WEIGHT AND BALANCE

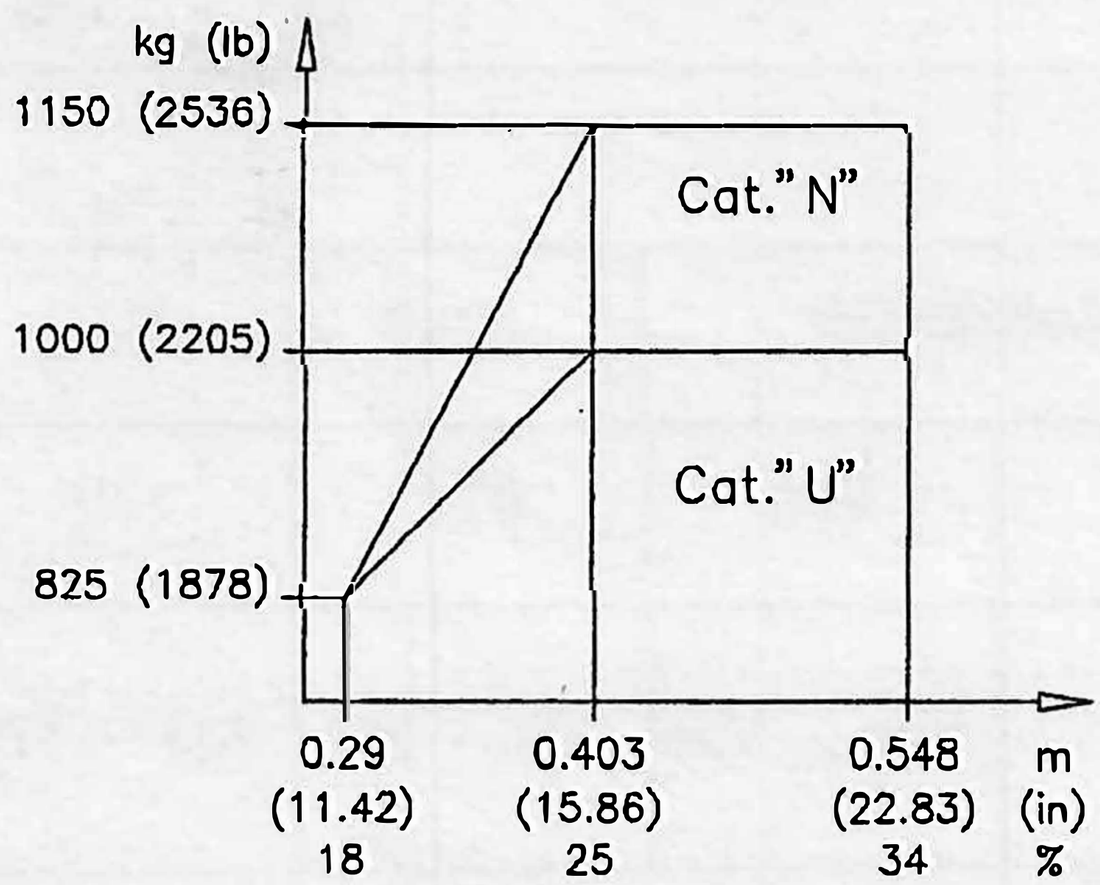

Levelling ..... Upper fuselage longeron
Datum ..... wing leading edge, rectangular section
Chord line ..... (63.46 in) 1.612 m

LOAD PLANNING

(Refer also to weight and balance chart, section 6)

The weight of engine oil, as well as unusable fuel, must be included in the empty weight of the aircraft.

	Weight kg (lb)	Arm m (in)
Front seats	2 x 77 (2 x 170)	0.50 - 0.60 (19.68) - (23.62)
Rear seats (*)	2 x 77 (2 x 170)	1.33 (52.36)
Fuel (*)	163 (359)	0.25 (9.84)
Baggage (*)	40 (88)	1.9 (75)

* Within the authorized weight and balance limits.

ENGINE LIMITATIONS

Continuous starter operation ..... 30 sec.
Max. continuous power (red line) ..... 2600 rpm
Max. cylinder head temperature. (red line) ..... (260 °F) 260 °C

TACHOMETER MARKINGS

Red arc ..... 2150 to 2350 rpm
Green arc ..... 2350 to 2600 rpm
Red line ..... 2600 rpm

OIL

Maximum temperature (red line) ..... (244 °F) 118 °C
Normal temperature (green arc) ..... (104 to 244 °F) 40 to 118 °C
Normal pressure (green arc) ..... (60 to 90 psi) 4.1 to 6.2 bar
Minimum idle pressure (red line) .....(25 psi) 1.70 bar
Maximum pressure (red line) .....(100 psi) 6.9 bar

FUEL

Aviation petroleum ..... AVGAS 100 LL
Normal pressure ..... (1.03 to 16.24 in.Hg) 35 to 550 mbar

LOAD LIMITS

Number of occupants :
Front seats 2
Rear seats 2

Baggage compartment :
Maximum authorised weight ..... (88 lb) 40 kg

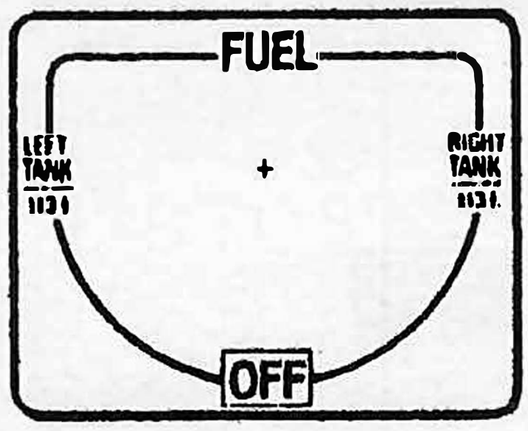
FUEL
LEFT TANK
RIGHT TANK
OFF

CARBU HEAT
OFF
THROTTLE
FULL
MIXTURE
RICH

MANUAL
PULL
AUTO

INDICATORS
AUXILIARY SYSTEMS
STARTER
FLAPS
WARNING LAMPS

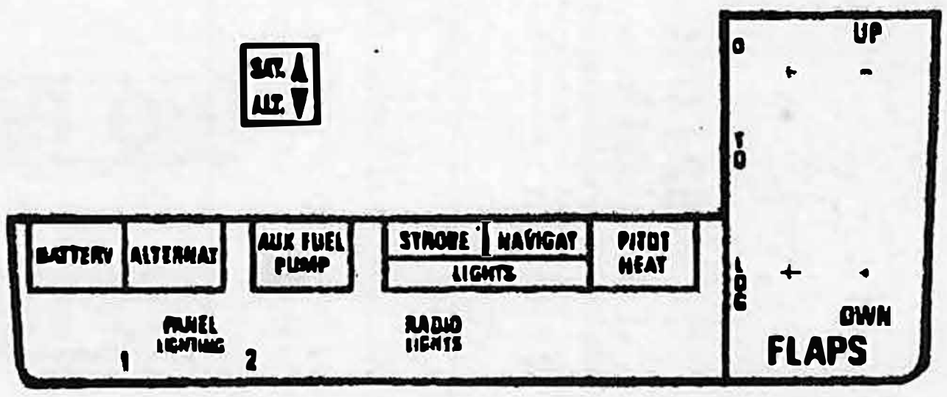
SET
ALT.
BATTERY
ALTERNAT
AUX FUEL PUMP
STROBE
NAVIGAT
LIGHTS
PITOT HEAT
PANEL LIGHTING
RADIO LIGHTS
1
2
UP
TO
DOWN
FLAPS

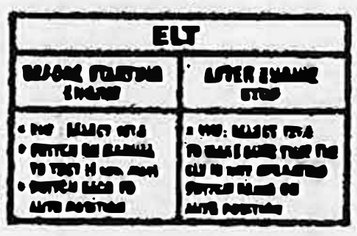
ELT

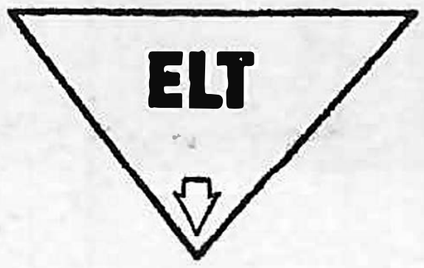
ELT

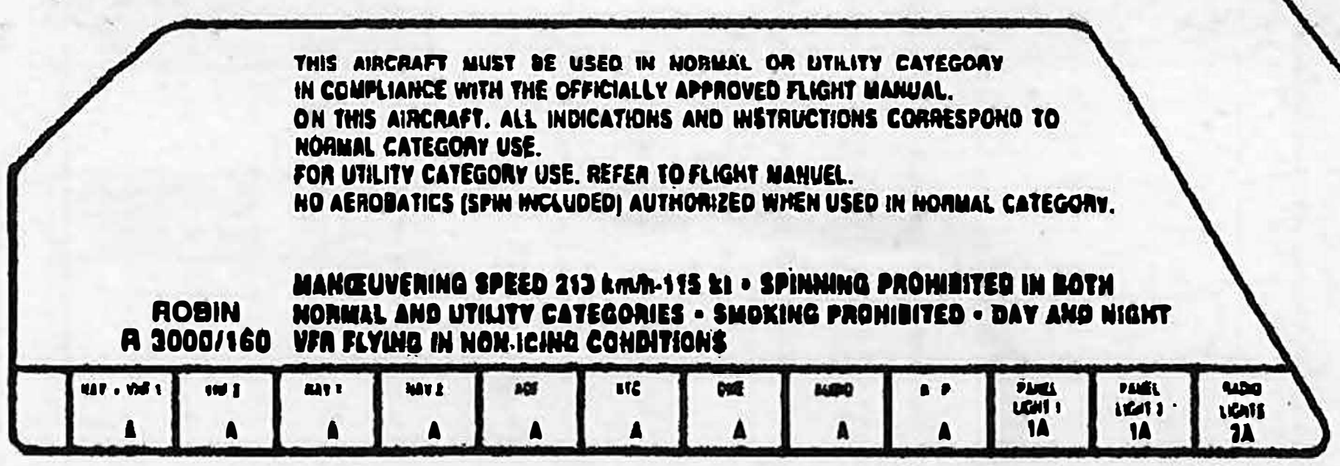
THIS AIRCRAFT MUST BE USED IN NORMAL OR UTILITY CATEGORY
IN COMPLIANCE WITH THE OFFICIALLY APPROVED FLIGHT MANUAL.
ON THIS AIRCRAFT, ALL INDICATIONS AND INSTRUCTIONS CORRESPOND TO
NORMAL CATEGORY USE.
FOR UTILITY CATEGORY USE, REFER TO FLIGHT MANUEL.
NO AEROBATICS (SPIN INCLUDED) AUTHORIZED WHEN USED IN NORMAL CATEGORY.
ROBIN
R 3000/160
MANŒUVERING SPEED 213 km/h-115 kt • SPINNING PROHIBITED IN BOTH
NORMAL AND UTILITY CATEGORIES • SMOKING PROHIBITED • DAY AND NIGHT
VFR FLYING IN NON-ICING CONDITIONS
A
A
A
A
A
A
A
A
A
1A
1A
2A

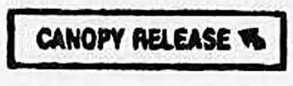
CANOPY RELEASE

MIKE
PHONES

TAXI
LDG
LIGHTS

PARKING BRAKE
BRAKE ON
PRESS FIRMLY ON BOTH
PEDALS WHILE PULLING
THIS KNOB UPWARDS
BRAKE OFF
PUSH THE KNOB DOWN

CAUTION

TRIM
NOSE DWN
TAKE OFF
NOSE UP

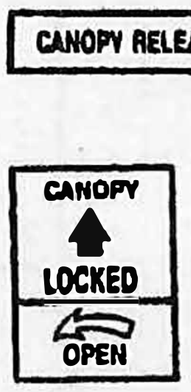
CANOPY RELEASE
CANOPY
LOCKED
OPEN

SWITCH OFF ENGINE IF STARTER
WARNING LIGHT STAYS ON
BAGGAGE BAY
40 Kg
SEE LOADING DIAGRAM

MANŒUVERING SPEED

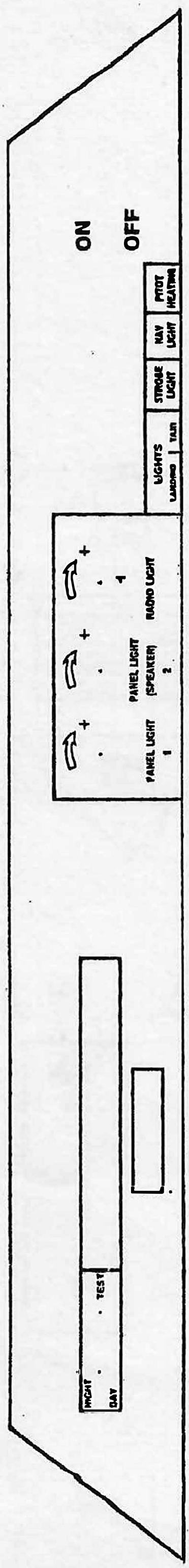

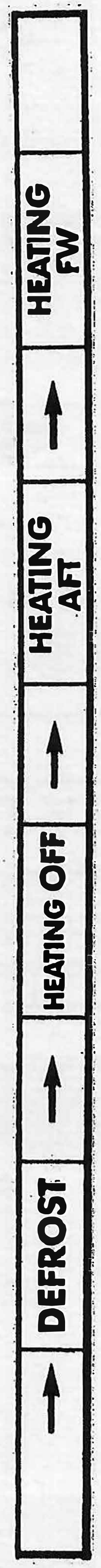

OPEN

LOCKED

NO HAND

NO HAND

NO STEP

NO STEP

AVGAS 100 LL
114 l

AVGAS 100 LL
114 l

OPERATIONAL LIMITATIONS IN THE "U" CATEGORY

Within the limits of this category, the following maneuvres are authorized :

- Steep turns (60°)
- Lazy eights
- Zooms
- Flight at minimum controllable air speed

These maneuvres must be carried out within the conditions below:

- The rear seats must be unoccupied.
- Entry and exit speeds must be within the normal operating range.
- Recommended entry speed : (116 kt) 215 km/h.

Demonstrated crosswind : 40 km/h - 25 MPH - 22 kt

PAGE INTENTIONALLY LEFT BLANK

SECTION 3 EMERGENCY PROCEDURES

TABLE OF CONTENTS

Engine failure during take off roll 3.02
Engine failure immediately after take off 3.02
Engine failure in flight 3.03
Power off forced landing off airfield 3.03
Precautionary power landing off airfield 3.04
Fire 3.04
Vibrations and roughness engine operation 3.06
Low oil pressure 3.06
Icing 3.07
Electrical power supply malfunction 3.08
Inadvertent spins 3.08
Loss of elevator control 3.09

ENGINE FAILURE DURING TAKE OFF ROLL

With sufficient runway remaining

Throttle to idle, and stop in the runway axis using brakes as required.

Without sufficient runway remaining

Throttle ..... idle
Brakes ..... apply heavily
Mixture ..... idle cut-off
Fuel valve ..... off
Magneto switch ..... off
Battery switch ..... off

ENGINE FAILURE IMMEDIATELY AFTER TAKE OFF

Glide speed (flaps in take off position) ..... (73 kt) 135 km/h
Mixture ..... idle cut-off
Fuel valve ..... off
Magneto switch ..... off

Keep the battery switch "on" to have the flaps completely extended then off before impact.

NOTE CAREFULLY

Land straight ahead, with only small direction changes to avoid obstructions.

Never try to turn back to the runway, as altitude after take off is seldom sufficient.

ENGINE FAILURE IN FLIGHT

If altitude is evaluated to be sufficient to try an engine restart :

- Establish maximum glide speed, flaps up 170 km/h (92 Kt). (In these conditions, and without wind, the aircraft covers approximately 9.3 times its altitude).
- Fuel valve ..... open
- Electric pump ..... on
- Mixture ..... fully rich
- Throttle ..... 1/4 travel forward
- Magneto switch ..... L+R ("Both")

If the propeller still turns, the engine should restart.

If the propeller is stopped, operate the starter.

If the engine still does not start, prepare for a forced landing, following the procedure below.

POWER OFF FORCED LANDING OFF AIRFIELD

Look for a suitable landing area :

Belts and harness ..... tight
Electric pump ..... off
Mixture ..... idle cut-off
Throttle ..... to idle
Magneto switch ..... off
Fuel valve ..... off
Alternator switch ..... off

Keep the battery switch "on" to have the flaps completely down, then switch off before impact

Final

Flaps ..... full down
Battery switch ..... off
Canopy ..... unlocked

PRECAUTIONARY POWER LANDING OFF AIRFIELD

Fly over the choosen field several times at low speed 135 km/h (73 Kt) in order to locate the most suitable landing area, flaps in "take off" position then make a precautionary approach at 125 km/h (67 kt), flaps in "landing" position.

On final, unlock the canopy.

Before touchdown

Magneto switch ..... off
Battery switch ..... off

NOTE : IN CASE OF CANOPY JAMMING

Canopy handle in "open" position.

Free the two canopy release levers located on the arm rests, on both sides of the instrument panel, and place them in vertical position.

FIRE

Engine fire during starting

Keep the engine turning with :
Fuel valve ..... off
Electric pump ..... off
Throttle ..... full power
Mixture ..... idle cut-off

The aim of this procedure is to make the engine "swallow" the accumulated fuel in the inlet pipes (generally following an excess of fuel injection during a difficult engine start).

If the fire continues

Magneto switch ..... off
Battery switch ..... off
Alternator switch ..... off

Abandon the aircraft, and try to extinguish the fire with the aids available : fire extinguishers, covers, clothing, or sand.

Engine fire in flight

- Fuel valve ..... off
- Throttle ..... full power until engine stops.
- Mixture ..... idle cut-off
- Electric pump ..... off
- Alternator switch ..... off
- Cabin heat and ventilation ..... off
- Establish maximum glide speed. ..... (86 kt) 160 km/h
- Prepare for a forced landing off airfield, following the procedures in the chapter "Power off forced landing off airfield".
- Do not attempt to restart the engine.

Cabin fire

Extinguish the fire by all means possible (Optional extinguisher)

To eliminiate smoke, apply maximum ventilation.

In case of an electrical fire, (fumes indicating insulation burning) :

- Cabin ventilation ..... reduce
- Alternator switch ..... off
- Battery switch ..... off

Land quickly if the fire continues.

VIBRATIONS AND ENGINE ROUGHNESS OPERATION

Vibrations and engine roughness operation are generally due to (verify in this order) :

- Carburator icing : see paragraph "Icing" on next page
- mixture set too rich or too lean : adjust the mixture (see section 4)
- Contamination in the fuel system : verify fuel pressure. Switch on the electric pump.
- Ignition failure : magneto switch on "L", then on "R", then return to "BOTH".

Select the position providing best engine operation, and fly to the nearest airfield, at reduced power, and mixture set "Full Rich"

LOW OIL PRESSURE

In case of low oil pressure indication, check oil temperature, and if it is too high, (red arc) :

- Reduce power
- Fly to the nearest airfield, and prepare for an off airfield landing.

ICING

Proceed as follows when inadvertently encountering icing :

- Carburetor heat on
- Increase power in order to reduce ice built-up to minimum.
- Switch on pitot heat (if installed).
- Select maximum cabin heat, and direct the total output to the windscreen (position "defrost") in order to remove the ice quickly.
- Turn back, or change altitude, to obtain an outside air temperature less conducive to icing.
- Plan to land at the nearest airfield.

With an extremely rapid ice build-up, carry out a forced landing.

Remember that a layer of 0.5 cm (0.2 in) on the wing leading edge fairly increases stall speed. If needed, use a higher than normal approach speed : 140 km/h (75 Kt).

REMARKS

If continuous carburator heat is deamed necessary, it is imperative to adjust the mixture control to obtain normal engine operation.

Always use carburetor heat fully on or fully off, in certain cases, an intermediate position could increase icing.

ELECTRICAL POWER SUPPLY MALFUNCTION

Alternator failure is indicated when the amber "alternator failure" light on the warning panel is lit, and a progressive drop in voltage (shown on the voltmeter).

If "alternator failure" is lit

- Switch off alternator, then back on.
  This operation resets the overvoltage relay which may have cut-out due to a transiant overvoltage.

If the failure continues

- Switch off the alternator
- Switch off all electrical equipment not essential for continuing the flight
- Land as soon as possible, and have the electrical system inspected.

NOTE

An alternator failure does not prevent the engine from operating normally.

INADVERTENT SPIN

Should a spin occur, use the following procedure :

- Throttle ..... idle
- Rudder ..... maximum opposite to direction of rotation
- Elevator ..... fully forward
- Ailerons ..... neutral
- Once rotation stops, rudder to neutral position and recover within flight limitations.

NOTE

If flaps are down when spin begins, retract them immediately.

LOSS OF ELEVATOR CONTROL

In the event of loss of elevator control (accidental disconnection)

- Stabilize the aircraft in level flight, flaps up, at 135 km/h (73 kt), using the elevator trim and throttle.

- Do not change the elevator trim setting, and control the angle of descent only with throttle.

  Reduce power only on short final, and near to the ground.

PAGE INTENTIONALLY LEFT BLANK

SECTION 4 NORMAL PROCEDURES

TABLE OF CONTENTS

Loading 4.03
Normal operating speeds 4.03
Preflight inspection 4.04
Cabin interior check prior start-up 4.06
Starting engine 4.06
After engine start 4.07
Taxiing 4.08
Engine run-up 4.08
Before take off 4.09
Take off 4.09
Climb 4.10
Cruise 4.10
Descent 4.12
Landing 4.12
Engine shut-down 4.13
Parking brake use 4.14

PAGE INTENTIONALLY LEFT BLANK

LOADING

Before each flight, insure that the total weight and the load balance are within the established limits. For this, use the weight and balance chart in section 6.

NORMAL OPERATING SPEEDS

The speeds reminded here under are indicated air speeds recommended for normal operations.

They are based on a standard aircraft, operated at gross weight, in standard atmosphere, at sea level. They can change from one aircraft to another, depending on installed equipment, aircraft and engine condition, atmospheric conditions and pilot proficiency.

- Best rate of climb speed
  flaps in take off position ..... (78 kt) 145 km/h
  flaps up ..... (92 kt) 170 km/h

- Best angle of climb speed
  flaps in take off position ..... (67 kt) 125 km/h
  flaps up ..... (78 kt) 145 km/h

- Maximum operating speed in turbulence
  flaps up ..... (134 kt) 249 km/h

- Maximum speed
  flaps in landing position ..... (94 kt) 174 km/h

- Landing speed final approach
  flaps in landing position ..... (65 kt) 120 km/h

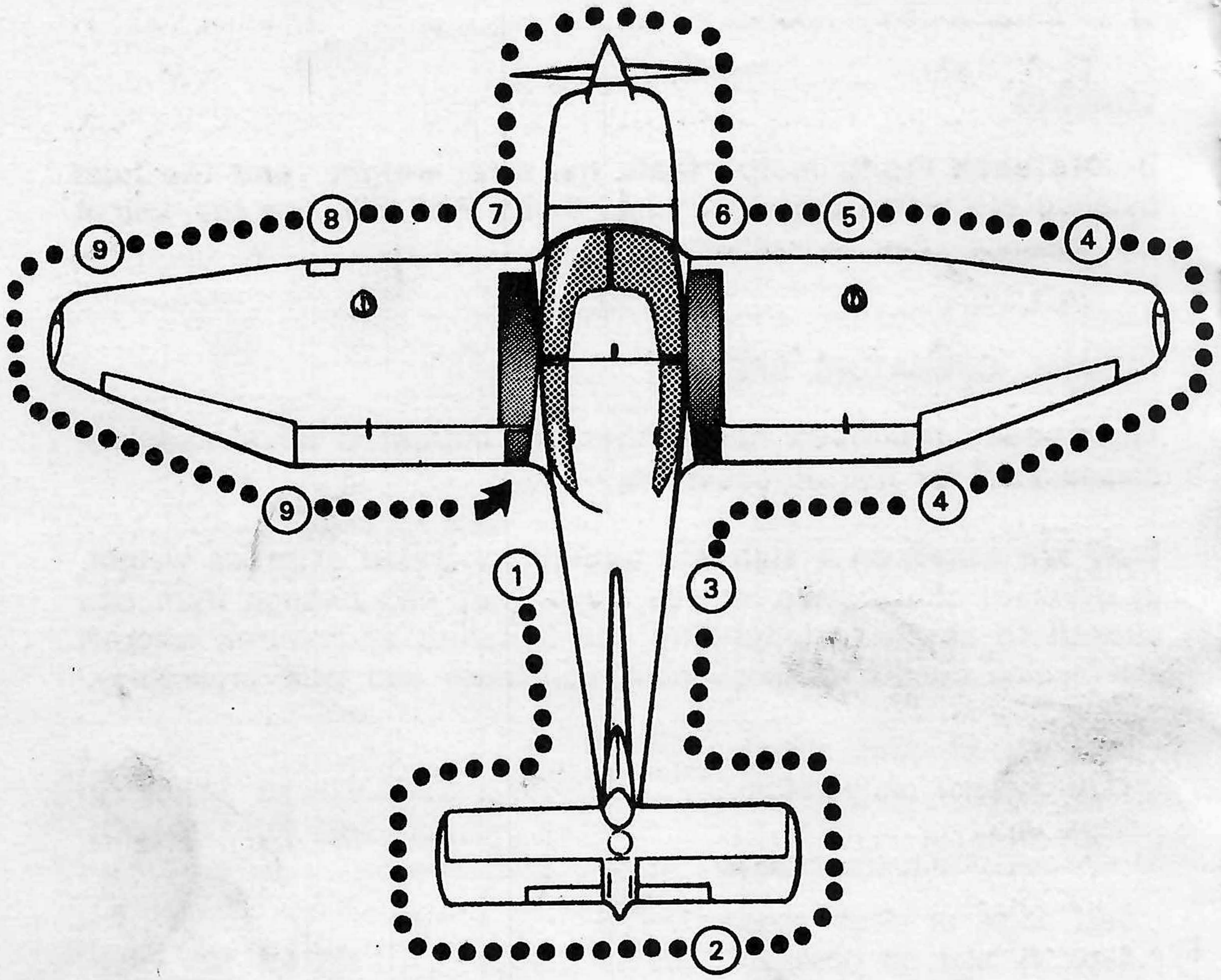

PREFLIGHT INSPECTION

To be performed before each flight.
This inspection may be reduced after intermediate on route landings.

Magneto switch ..... off
Controls ..... free
Battery switch ..... on
Flaps ..... check operation
Fuel quantity ..... check
Battery switch ..... off
Aircraft documents ..... check availability on board
Baggage ..... check stowing

Check flight controls displacements, then make an aircraft walk-around inspection (as shown above) beginning at the fuselage left side.

1	Static vent	clean, unobstructed
2	Horizontal stabilizer	surface condition, hinges without clearance
	Rudder	check hinges and clearance
3	Static vent	clean, unobstructed
4	Flap and aileron	check condition and hinges
	Wing tip and navigation light	check condition
5	Stall warning	clean check displacement
	Right main landing gear	check attachment and fairing condition
		normal shock absorber compression
		tyre inflated
	Right tank drain valve	actuated
6	Oil level	check, oil cap secured, panel closed
	Engine cowl attachment	check
	Propeller	clean, in good condition
	Propeller spinner	no play
	Air inlets	clean, unobstructed
7	Nose gear	check attachment and fairing condition
		normal shock absorber compression
		tyre inflated
		tow-bar removed
	Exhaust pipes	rigid
	Canopy cleanliness	check
8	Left main landing gear	check attachment and fairing condition
		normal shock absorber compression
		tyre inflated
	Left tank drain valve	actuated
	Pitot	clean, unobstructed
	Lights	glass clean
9	Wing tip and navigation light	check condition
	Flap and aileron	check condition and hinges

CABIN INTERIOR CHECK PRIOR START-UP

Canopy ..... closed and locked
Parking brake ..... locked
Front seats ..... adjusted and locked
Belts and harnesses ..... adjusted and fastened
Flight controls free ..... without play or excessive friction
..... (check rudder on taxi)
Elevator trim ..... verify travel,
and return to neutral
Master switch ..... on

STARTING ENGINE

Normal procedure

Carburetor heat ..... off
Mixture ..... fully rich
Strobe light ..... on
Gauges ..... check
Fuel valve ..... check operation, open
Magneto switch L
Electric pump ..... on
Throttle ..... carry out 2 or 3 injections, then 1/4 travel forward
Propeller area ..... clear
Starter ..... on (max. operation time 30 sec)
Magneto switch ..... L+R ("Both").

Hot engine procedure

Same as "Normal procedure", but without injection.

Cold weather procedure

Same as "Normal procedure", but keeping successive injections up to 900 to 1000 rpm.

Engine "flooded"

Electric pump ..... off
Mixture ..... idle cut-off
Throttle ..... full power
Starter ..... operate for several seconds

As soon as the engine starts, advance mixture control to "rich", and resume the normal procedure, without injection.

CAUTION
Avoid operating the starter for more than 30 seconds. Wait at least a minute before operating it again.
As soon as the engine is running, verify the engine oil pressure. If it is zero after 15 to 20 seconds, switch off, and investigate the cause.

AFTER THE ENGINE STARTS

Rpm 1200
Electric pump ..... off
Alternator switch ..... on
Voltmeter ..... green arc
Vacuum gauge (if installed) ..... check
Lights ..... test

Radio ..... on
Altimeter ..... set
Flaps ..... up

TAXIING

Parking brake ..... unlocked
Brakes ..... test
Turn and bank indicator ..... check
Directional gyro ..... check setting
Avoid exceeding 1200 rpm as long as oil temperature remains in the yellow range.

ENGINE RUN-UP

Parking brake ..... locked
Oil pressure and temperature ..... green range
Fuel pressure ..... green range
Mixture ..... fully rich
Carburetor heat ..... off

Magneto check

Throttle ..... 2000 rpm

Magneto selection :
Max. drop between L or R and L+R ("Both") ..... 175 rpm
Max. difference between L and R ..... 50 rpm

Carburetor heat check

Carburetor heat ..... on
Check rpm drop, (approx. 100) then return to ..... off

Mixture check

Lean until rpm reduction, then return to "full rich"

Engine idle check

Throttle ..... 600 to 650 rpm

BEFORE TAKE OFF

Controls ..... free
Magneto switch ..... L+R ("Both")
Cabin (Seats,belts,canopy) ..... check
Fuel ..... Switch the most full tank
Electric pump ..... on
Elevator trim ..... neutral according to balance
Engine instruments ..... check
Flight instruments ..... set
Flaps ..... fully down, then return to "take off position"
Throttle ..... "holding" 1200 rpm

TAKE OFF

Normal take off

Take off minimal rpm 2200
Take off speed ..... (59 kt) 110 km/h
Initial climb speed ..... (67 kt) 125 km/h

After obstacle clearance,

reduce angle of climb to obtain ..... (78 kt) 145 km/h
Electric pump ..... off
Fuel pressure ..... check (green range)
Flaps ..... up

Short take off

Flaps ..... take off position
Apply full power (brakes applied) ..... (mini.) 2200 rpm
then release the brakes
Take off speed ..... (59 kt) 110 km/h
Then, if necessary, (to clear an obstacle)
best angle of climb speed ..... (67 kt) 125 km/h

Crosswind take off

Flaps ..... take off position
Ailerons ..... into the wind
Take off at a slightly higher airspeed than normal.
Correct drift in the normal way, (max. bank angle, close to the ground : 15°).

Demonstrated cross-wind velocity (22 kt) 40 km/h

CLIMB

Normal climb (flaps up)

Set climb speed 170 km/h (92 kt), decrease 10 km/h (5 kt) per section of 3000 ft.

Above 5000 ft, adjust mixture.

Best angle of climb

A better rate of climb is obtained at 125 km/h (67 kt), flaps in take off position, and 145 km/h (78 kt) with flaps up.

NOTE

This type of climb should only be used exceptionally, due to poor engine cooling.

CRUISE

Refer to section 5 for rpm settings and cruise performance.

Operation of mixture control

Maintain mixture control in the "full rich" position during take off and in the climb.

In certain conditions (high altitude take off, long climb above 5000 ft), this setting could be too rich, and result in irregular engine operation or loss of power.

In these cases, adjust the mixture to recover regular engine operation, and not for fuel economy.

Mixture adjustment when in stable cruise :

Progressively lean the mixture until a slight reduction in rpm is noted ; then lightly enrich to re-establish power and normal engine operation.

USE OF FUEL

Switch over from tank to tank approximately every 30 minutes while keeping a watch on the fuel pressure (switch on the electric pump when changing tank)

Switch the most full tank before take off or landing.

NOTE

Take care not to lean the mixture too much, which would cause engine overheating.

ALWAYS ENRICH THE MIXTURE BEFORE AN INCREASE IN POWER.

DESCENT

Rapid descent

Power ..... as required to maintain the desired descent path
Carburetor heat ..... on
Each 1500 ft, apply power to avoid excessive engine cooling, and to clean the spark plugs.

Approach or down wind

Fuel .....switch the most full tank
Mixture ..... fully rich
Electric pump ..... on
Carburetor heat as required ..... on or off
Cabin (Belts and seats) ..... check
Flaps ..... below 175 km/h (94 kt) in take off position
Speed ..... (81 kt) 150 km/h
Elevator trim ..... set
Roll stabilizer or Autopilot (if equipped) ..... off

Final

Carburetor heat ..... off
Flaps ..... below 150 km/h (81 kt) landing position
Approach speed ..... (65 kt) 120 km/h
Elevator trim ..... set

LANDING

Short landing

Flaps ..... landing position
Approach speed, with throttle setting ..... (62 kt) 115 km/h
After touchdown, brake heavily keeping nose up with elevator and retracting flaps.

Landing in crosswind or gusty conditions

Flaps ..... take off position
Approach speed ..... 130 km/h (70 kt) + 1/2 gust speed
Correct drift in the normal way.
Demonstrated crosswind ..... (22 kt) 40 km/h

Overshoot procedure

Carburetor heat off ..... check
Throttle ..... full
Speed ..... (67 kt) 125 km/h
Progressively raise flaps to the "take off position", then establish normal climb speed ..... (78 kt) 145 km/h

AFTER LANDING

Electric pump ..... off
Flaps ..... up
Navigation instruments ..... off

ENGINE SHUT-DOWN

Parking brake ..... tight
Flaps ..... down
Radio and electrical equipment ..... off
Magneto cutoff check at idle ..... off, then L+R ("Both")
Rpm 1000
Mixture ..... idle cut-off

After the engine stops

Magneto switch ..... off
Alternator switch ..... off
Battery switch ..... off
Release the parking brake when weel chocks in place.

PARKING BRAKE USE

Brake on

Press on both pedals. Keep pressure on, while pulling the parking brake control upwards :
then, release the pressure on the pedals (the parking brake control remains in the pulled position).

Brake off

Push the control down.

PAGE INTENTIONALLY LEFT BLANK

SECTION 5 PERFORMANCE

TABLE OF CONTENTS

Noise limitation 5.02
Air speed installation calibration 5.02
Stall speeds 5.03
Take off performance 5.04
Climb performance 5.05
Cruise performance 5.07
Landing performance 5.08

NOISE LIMITATION

In compliance with the decree of 19.02.1987, the maximum acceptable noise level for the R 3000/160 aircraft, at a certified gross weight of (2536 lb) 1150 kg, is 75.3 dB(A).

The noise level, determined under the conditions of the decree, is 74 dB(A), at max. continuous power.

The R 3000/160 aircraft has received noise limitation certificate Nr N172.

AIRSPEED INSTALLATION CALIBRATION

VC = (VI + calibration) is substantially equal to VI

VC = VI + (1.6 kt) 3 km/h (approx.) with flaps up
VI + (1 kt) 2 km/h with 10° flaps

The above figures do not take into account the ASI own tolerances

NOTE

All speeds in this manual are Indicated Air speeds unless otherwise specified

STALL SPEEDS

WEIGHT : 1150 kg (2536 lb), engine idle

	km/h (kt)		
Bank angle	0 °	30 °	60 °
Flaps up	106 (57)	114 (62)	159 (86)
Flaps Take off position	99 (53)	106 (57)	140 (76)
Flaps Landing position	91 (49)	98 (53)	129 (70)

TAKE OFF PERFORMANCE

At gross weight 1150 kg (2536 lb)
Without wind, flaps in "take off" position, engine full power
Dried and plane concrete runway
Take off speed ..... (59 kt) 110 km/h
Over 15 m (50 ft) barrier speed ..... (67 kt) 125 km/h

PRESSURE ALTITUDE (ft)	TEMPERATURE °C (°F)	WEIGHT 1150 kg (2536 lb)				WEIGHT 950 kg (2095 lb)			
		Take off distance		Run to clear 15 m (50 ft) barrier		Take off distance		Run to clear 15 m (50 ft) barrier	
		m	(ft)	m	(ft)	m	(ft)	m	(ft)
0	- 5 (23)	270	(886)	485	(1591)	225	(738)	400	(1312)
	Std = 15 (59)	310	(1017)	565	(1854)	255	(836)	465	(1526)
	35 (95)	355	(1165)	645	(2116)	295	(967)	535	(1755)
4000	- 13 (7)	380	(1245)	730	(2395)	315	(1033)	605	(1985)
	Std = 7 (45)	450	(1476)	810	(2657)	370	(1214)	670	(2198)
	27 (81)	520	(1706)	935	(3068)	430	(1411)	770	(2526)
8000	- 21 (- 6)	550	(1804)	995	(3264)	455	(1493)	820	(2690)
	Std = - 1 (30)	650	(2133)	1155	(3789)	535	(1755)	955	(3133)
	19 (66)	760	(2493)	1345	(4412)	630	(2066)	1110	(3642)

Head wind influence : For 10 kt multiply by 0.80
For 20 kt multiply by 0.65
For 30 kt multiply by 0.55

Down wind influence : Add 10 % to distance per section of 2 kt

Dried grass runway : Add 15 %

CLIMB PERFORMANCE

1) Flaps, take off position :

At maximum weight of 1150 kg (2536 lb) in standard atmosphere

Maximum rate of climb after take off ..... (867 ft/mn) 4.4 m/s
reduction of 0.3 m/s (59 ft/mn) per 1000 ft
Best rate of climb speed ..... (78 kt) 145 km/h
Best angle of climb speed ..... (67 kt) 125 km/h

2) Flaps up :

In standard atmosphere,
Full throttle, mixture best power,

At maximum weight of 1150 kg (2536 lb)

Maximum rate of climb after take off ..... (872 ft/mn) 4.45 m/s
reduction of 0.25 m/s (49 ft/mn) per 1000 ft
Service ceiling ..... 15500 ft
Best rate of climb speed after take off ..... (92 kt) 170 km/h
up to ceiling (70 kt) 130 km/h
Best angle of climb speed ..... (78 kt) 145 km/h

At weight of 900 kg (1984 lb) :

Maximum rate of climb after take off ..... (882 ft/mn) 4.5 m/s
reduction of 0.28 m/s (55 ft/mn) per 1000 ft

Temperature influence :

Each 10 °C above standard, lowers the ceiling by 1000 ft and reduces rate of climb by 0.28 m/s (55 ft/mn)

Time, Consumption, Climb Distance

At gross weight 1150 kg (2536 lb)
Without wind, in standard atmosphere,
Flaps retracted, full power : maximum rate of climb after take off.
Start and roll consumption included

PRESSURE ALTITUDE (feet)	TIME (min)	FUEL CONSUMPTION l (imp/us gal)	RANGE (km)	(Nm)
3000	3.5	4.0 (0.88/1.05)	9.5	5.2
5500	7.0	7.0 (1.54/1.84)	19	10
8500	12.5	13.0 (2.75/3.3)	34	18
11500	21.0	20.0 (4.62/5.54)	53	28

Glide performance

Engine off, the aircraft glides 9.3 time its height (without wind) at 170 km/h (92 kt).
Altitude and temperature do not have a perceptible influence.

CRUISE PERFORMANCE

At gross weight 1150 kg (2536 lb), in standard atmosphere, Optimum mixture setting, usable fuel (49.72 imp/59.66 us gal) 226 l without reserve fuel, without wind,

Consumption and climbing time compensated with descent.

PRESSURE ALTITUDE	RECOMMANDED POWER	FUEL CONSUMPTION			TRUE AIR SPEED		ENDURANCE	RANGE	
feet	rpm	l/h	Gal/h imp	Gal/h us	km/h	kt	h.mn	km	Nm
2000	2500	39.1	8.6	10.3	225	121	5.45	1300	700
	2400	36.5	8	9.6	212	114	6.10	1310	710
5500	2600	39.1	8.6	10.3	240	130	5.45	1385	750
	2500	36.5	8	9.6	226	122	6.10	1400	755
	2400	32.3	7.1	8.5	212	114	7.00	1480	800
8500	2600	39.1	8.6	10.3	240	130	5.45	1385	750
	2500	33.9	7.1	8.5	226	122	6.40	1505	815
	2400	29.7	6.5	7.8	212	114	7.35	1610	870
11500	2600	33.9	7.1	8.5	240	130	6.40	1600	865
	2500	29.7	6.5	7.8	226	122	7.35	1715	925
	2400	27.1	6	7.2	212	114	8.20	1765	955

LANDING PERFORMANCE

At gross weight 1150 kg (2536 lb)
Without wind, flaps in "landing" position, engine idling,
Dried and plane concrete runway
Over 15 m (50 ft) barrier speed ..... (65 kt) 120 km/h
Touch down speed ..... (49 kt) 91 km/h

PRESSURE ALTITUDE (ft)	TEMPERATURE °C (°F)	WEIGHT 1150 kg (2536 lb)				WEIGHT 900 kg (2095 lb)			
		Landing distance		Landing ground roll over 15m (50ft) barrier		Landing distance		Landing ground roll over 15m (50ft) barrier	
		m	(ft)	m	(ft)	m	(ft)	m	(ft)
0	- 5 (23)	200	(656)	510	(1673)	165	(541)	420	(1378)
	Std = 15 (59)	210	(689)	530	(1739)	175	(574)	440	(1444)
	35 (95)	215	(705)	545	(1788)	180	(591)	450	(1476)
4000	- 13 (7)	230	(755)	555	(1821)	190	(623)	460	(1509)
	Std = 7 (45)	240	(787)	585	(1919)	200	(656)	485	(1591)
	27 (81)	250	(820)	610	(2001)	205	(673)	505	(1657)
8000	- 21 (- 6)	260	(853)	630	(2067)	215	(705)	520	(1706)
	Std = - 1 (30)	280	(919)	665	(2182)	230	(755)	550	(1804)
	19 (66)	300	(984)	705	(2313)	250	(820)	580	(1903)

Head wind influence : For 10 kt multiply by 0,80
For 20 kt multiply by 0,65
For 30 kt multiply by 0,55

Down wind influence : Add 10% to distance per section of 2 kt

Dried grass runway : Add 15%

PAGE INTENTIONALLY LEFT BLANK

SECTION 6 WEIGHT AND BALANCE

TABLE OF CONTENTS

Weight and balance diagram 6.02
Use of the weight and balance diagram 6.03

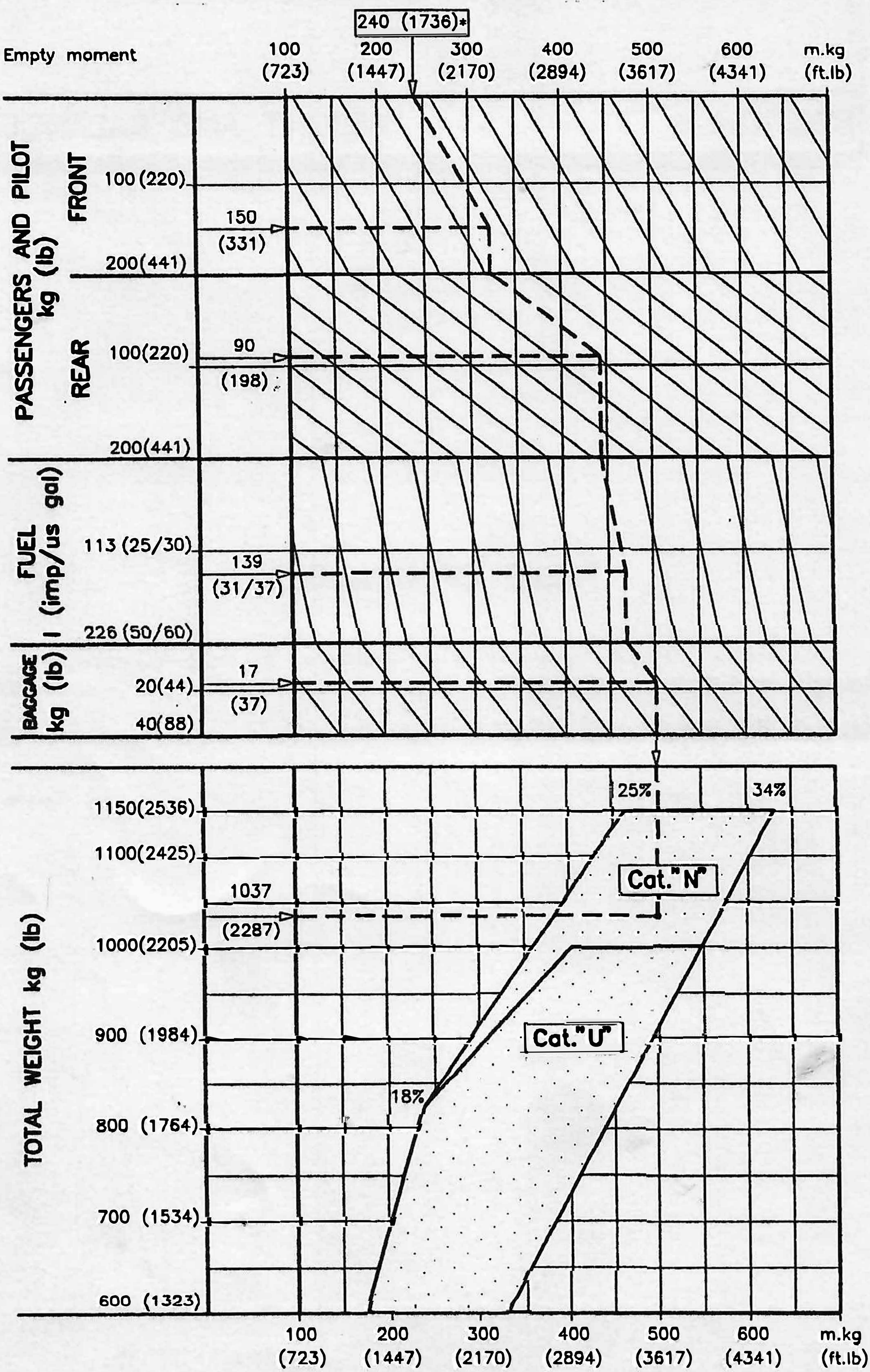
240 (1736)*
Empty moment
100 (723)
200 (1447)
300 (2170)
400 (2894)
500 (3617)
600 (4341)
m.kg (ft.lb)
PASSENGERS AND PILOT kg (lb)
FRONT
100 (220)
150 (331)
200(441)
REAR
100(220)
90 (198)
200(441)
FUEL l (imp/us gal)
113 (25/30)
139 (31/37)
226 (50/60)
BAGGAGE kg (lb)
20(44)
17 (37)
40(88)
TOTAL WEIGHT kg (lb)
1150(2536)
1100(2425)
1037 (2287)
1000(2205)
900 (1984)
800 (1764)
700 (1534)
600 (1323)
25%
34%
18%
Cat."N"
Cat."U"

USE OF THE WEIGHT AND BALANCE DIAGRAM

1) Calculate the total loaded aircraft weight :
   empty weight (from the weight and balance sheet)
   + pilot and passengers
   + baggage
   + standard fuel
   Insure that total weight does not exceed 1150 kg (2536 lb) in "N" category and 1000 kg (2205 lb) in "U" category.

2) Place the empty aircraft moment (from the weight and balance sheet) on the upper scale of the opposite diagram, and follow the example indicated by the dashed line.
   The resulting point must be within centre of gravity moment envelope (shaded area), for the load to be within limits.

EXAMPLE *

Empty aircraft - moment	(1736 ft.lb)	240 m.kg
Empty aircraft - weight	(1500 lb)	680 kg
Pilot + Front passenger	(331 lb)	150 kg
Rear passengers	(198 lb)	90 kg
Fuel 139 l (30.6 imp/36.7 us gal)	(220.5 lb)	100 kg
Baggage	(37.5 lb)	17 kg
TOTAL WEIGHT	(2287 lb)	1037kg

CENTRE OF GRAVITY : within the envelope

1 litre AVGAS = 0,72 kg (1.6 lb)
1 imp gal AVGAS = 3.27 kg (7.21 lb)
1 us gal AVGAS = 2.7 kg (6 lb)

*** ATTENTION**

For your aircraft center of gravity calculation, please do not use values of empty aircraft weight and empty aircraft moment indicated in the above example. Use values indicated on the last weight and balance sheet of your aircraft.

PAGE INTENTIONALLY LEFT BLANK

SECTION 7 OPTIONAL EQUIPMENT

TABLE OF CONTENTS

Night VFR 7.02
Roll stabilizer 7.06
Electric directional trim Yaw damper 7.08

USE OF THE R 3000/160 IN NIGHT VFR OPERATION AND IN NON-ICING CONDITIONS

List of special on board equipment, in addition to those required for day VFR airworthiness certificate issue.

In conformity with the decree of 19.06.1984.

1 - Gyro horizon indicator
2 - Turn and bank indicator
3 - Directional gyro indicator
4 - Rate of climb indicator
5 - Navigation lights
6 - Strobe lights
7 - Two landing lights
8 - Instrument panel lighting system
9 - A torch
10 - A category 2 VHF transceiver
11 - A category 2 VOR receiver, or a category 2 ADF
12 - Night VFR placard
13 - Spare fuses

The following placard must be placed on the instrument panel :

FLIGHT CONDITIONS
VFR BY DAY AND BY NIGHT
IN NON-ICING CONDITIONS

ELECTRICAL POWER SUPPLY FAILURE DUE TO BATTERY FAILURE

If, following a complete battery failure, the alternator deactivates involving loss of power supply, proceed as follows :

- Battery, Alternator, (and radio if installed) circuit breakers ..... off
- Reset : Battery switch ..... on
  Alternator switch ..... on
- Note recirculation of power in the circuits
- Reset only the switches necessary to ensure flight safety ..... on

ELECTRICAL POWER SUPPLY MALFUNCTION

See page : 3.08

ADVICE FOR NIGHT ORERATION

It's reminded that above 8000 ft there is a risk of disturbance in the pilot's night vision.

NORMAL PROCEDURES FOR NIGHT VFR FLIGHT

These procedures complete those of the standard equipped aircraft, described in section 4.

Preparation

Study of the meteorological report, in order to avoid flight in dangerous conditions (minima, icing...)

Verify that fuel and oil quantities comply with regulations.

Before Flight

Verify operation of :

- Strobe light
- navigation lights
- landing lights/taxi lights
- day/night selector switch
- on board emergency torch.

Taxiing

- Strobe light, navigation lights, and taxi light on
- Verify operation of gyro instruments
- Gyro horizon : adjust horizon datum
- Directional gyro : rotation correct
- Turn and bank indicator : movement correct

Before Take-off

- Check vacuum indication
- Test VHF
- Test VOR or ADF
- Heating : defrost as necessary
- Landing lights on

Take off

- Maintain positive climb on rate of climb indicator
- Switch off taxi and landing lights at the end of the runway

Use of Night Lighting

a) Engage lighting - 2
b) Ajust intensity with lighting - 1 as required

Landing

- Switch on Taxi and Landing lights.
- Switch off Landing light after landing.

After Engine Shut Down

- Switch off lights.

"CENTURY II B" ROLL STABILIZER

Description

The "Century II B" roll stabilizer is an auto pilot (AP) acting on the roll axis. It allows to steer a course or to be in line with a VOR station.

Operating Limitations

Minimal use height ..... 500 ft
Maximal use speed ..... (134 kt) 249 Km/h
Maximal fuel tank dissymetry ..... (4.4 imp/5.28 us gal) 20 l

Emergency Procedures

In case of malfunction, switch off "AP" main switch on intrument panel. The stabilizer can be easily overriden in activating the manual flight control.
Pull AP circuit breakers.

Normal Procedures

Before Take-off

1 Vacuum indicator ..... green arc
2 Gyros ..... verify
3 "AP" switch ..... off
4 Mode control ..... HDG
5 Automatic turn control and heading index. ..... centered
6 "AP" switch ..... on
7 Automatic turn control.. ..... L and R activated
8 Flywheel travel direction.. ..... neutral,verify
9 HDG switch ..... on
10 Heading selector button ..... turn L and R
11 Flywheel travel direction ..... neutral,verify
12 "AP" overriding : manual ..... verify
13 Before take-off "AP" switch ..... off

In Flight

1 Aircraft ..... trimed, ball in the middle
2 Automatic turn control ..... centered
3 "AP" switch ..... on
4 Select the work mode

For a VOR/ILS interception, select the desired heading or QFU with the OBS on the VOR.

Select a heading identical to directional The interception occurs under 45°

In Approach

and at the lowest height of 500 ft :
1 "AP" switch ..... off

ELECTRIC DIRECTIONAL TRIM YAW DAMPER

Description

The "S-TEC" system allows to trim the aircraft in yaw and improves its performance in turbulence.

Operating Limitations

Minimal use height ..... 500 ft
Maximal use speed ..... (134 Kt) 249 Km/h

In case of too severe turbulence, switch off the trim.

Emergency Procedures

In case of malfunction, apply the following procedure :

1 Stabilize the aircraft ..... (rudder bars)
2 Direction trim switch ..... off
3 Direction trim circuit breaker ..... off

Normal Procedures

Before Rolling

1 Direction trim switch ..... on
2 Rudder bars overriding load ..... verify
3 Trim switch ..... stop, disconnect verify (rudder bars)

In Flight

1 Aircraft trimed ..... ball in the middle
2 Trim switch ..... on
3 In approach, trim switch ..... off

PAGE INTENTIONALLY LEFT BLANK

FLIGHT MANUAL SUPPLEMENT DATA

CAA AIRWORTHINESS NOTICE NO. 88 ~~and 82~~

Aircraft Type:Robin R 3000-160

Aircraft Registration: G-CCCN

Aircraft Serial No: 167

Supplement to Flight Manual: Edition 2 April 1990

This supplement is required in accordance with the requirements of CAA Airworthiness Notice No. 88, paragraphs 2.3: 2.4: 2.5.

Paragraph 2.3

Duration of batteries following total generation system failure.

NIGHT Minimum 30 minutes

CIVIL AVIATION AUTHORITY
ADDITIONAL LIMITATIONS AND INFORMATION FOR UNITED KINGDOM CERTIFICATION

CAA Change Sheet 2 Issue 1 to the Avions Pierre Robin R3000/160 Aircraft Flight Manual, Edition 2, Dated April 1990

Avions Pierre Robin R3000/160	Constructor's Serial No.	Registration Mark
	167	G-CCCN

The limitations and information contained herein either add to or, in the case of conflict, override those in the Flight Manual

SECTION 7.02

Under current UK legislation (Rules of the Air 22), an aircraft flying at night outside a control zone shall be flown in accordance with the Instrument Flight Rules, or in a control zone shall be flown in accordance with the Instrument Flight Rules unless it is on a Special VFR flight.

Consequently, the reference to 'Night VFR' in Section 7 is incorrect and should be replaced by 'Night VMC'.

To be inserted in the Flight Manual facing page 7.01

Paragraph 2.4

CREW DRILLS

Pre-Flight Check

Before Engine Start:-

Gen/Alt	-OFF
Battery	-ON
Low Volts Warning Light	-ON

After Engine Start:-

Gen/Alt	-ON
Battery	-ON
Low Volts Warning Light	-OUT

Emergency Procedure (Total Generation Failure)

If low voltage warning light comes ON during flight, reduce electrical loads to minimum and carry out drill to re-instate generator.
If unable to re-instate generator, switch off all electrical services, including voltage regulators by means of switches or circuit breakers.

Notes:

a) A landing should be made as soon as possible, but under the generation failure conditions, the battery endurance should be _____30_____minutes.

b) VHF communication transmission should be restricted to a maximum of 3 minutes during total flight.

c) Other electrical services may be used at the pilots discretion, but the battery endurance will be reduced pro-rata.

Prepared by:.....Aero Anglia Ltd 5.3.03

This supplement to be inserted in the back of the Flight Manual and the Record of Supplements amended accordingly

CIVIL AVIATION AUTHORITY 46 15.4.2003

APEX Aircraft
1, route de Troyes
21121 Darois (FRANCE)
Tel. +33 (0)3 80 35 65 10
Fax +33 (0)3 80 35 65 15